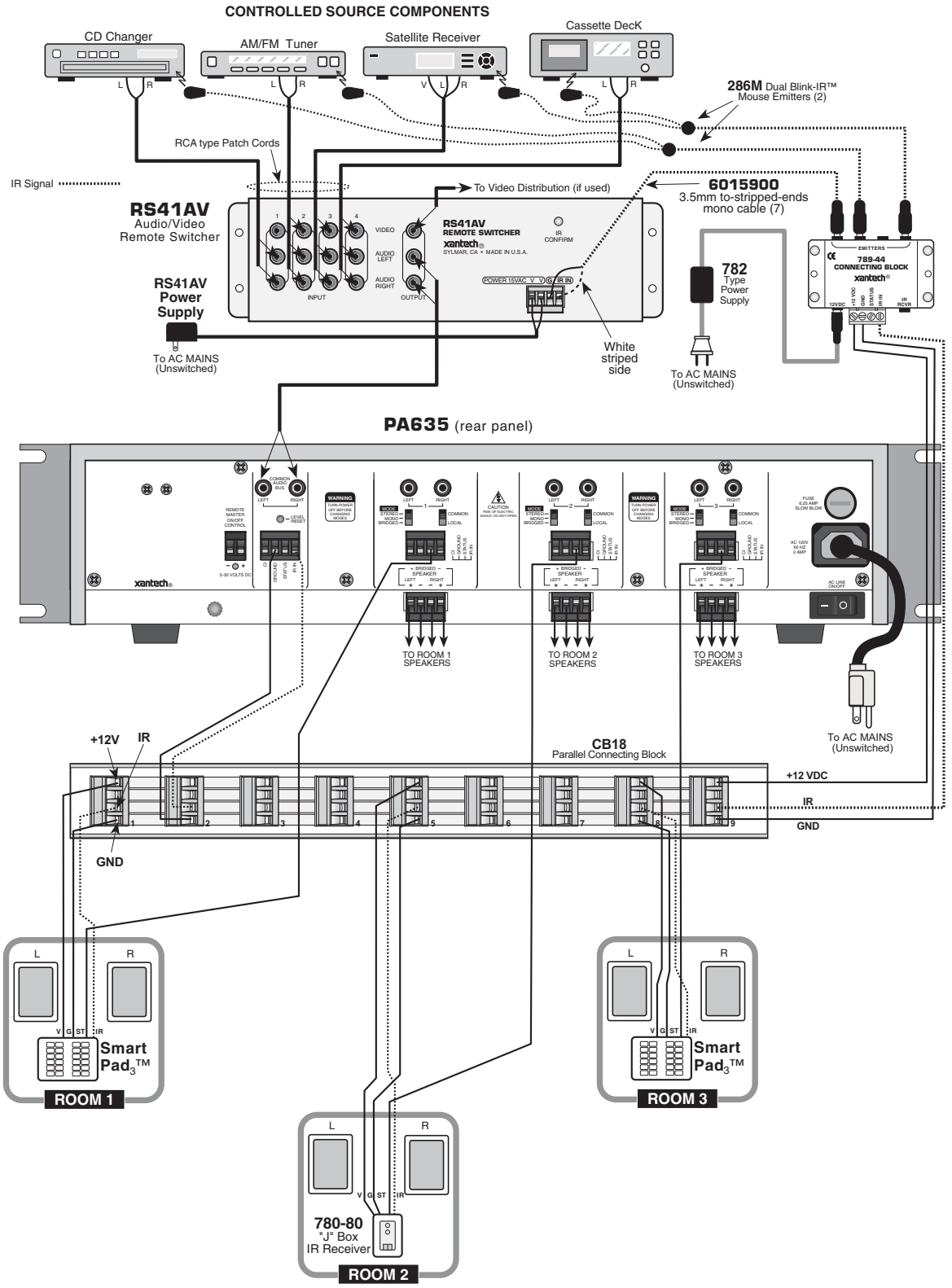

Figure 8 – Basic PA635 and RS41AV System – Requires Room-Dedicated Remotes