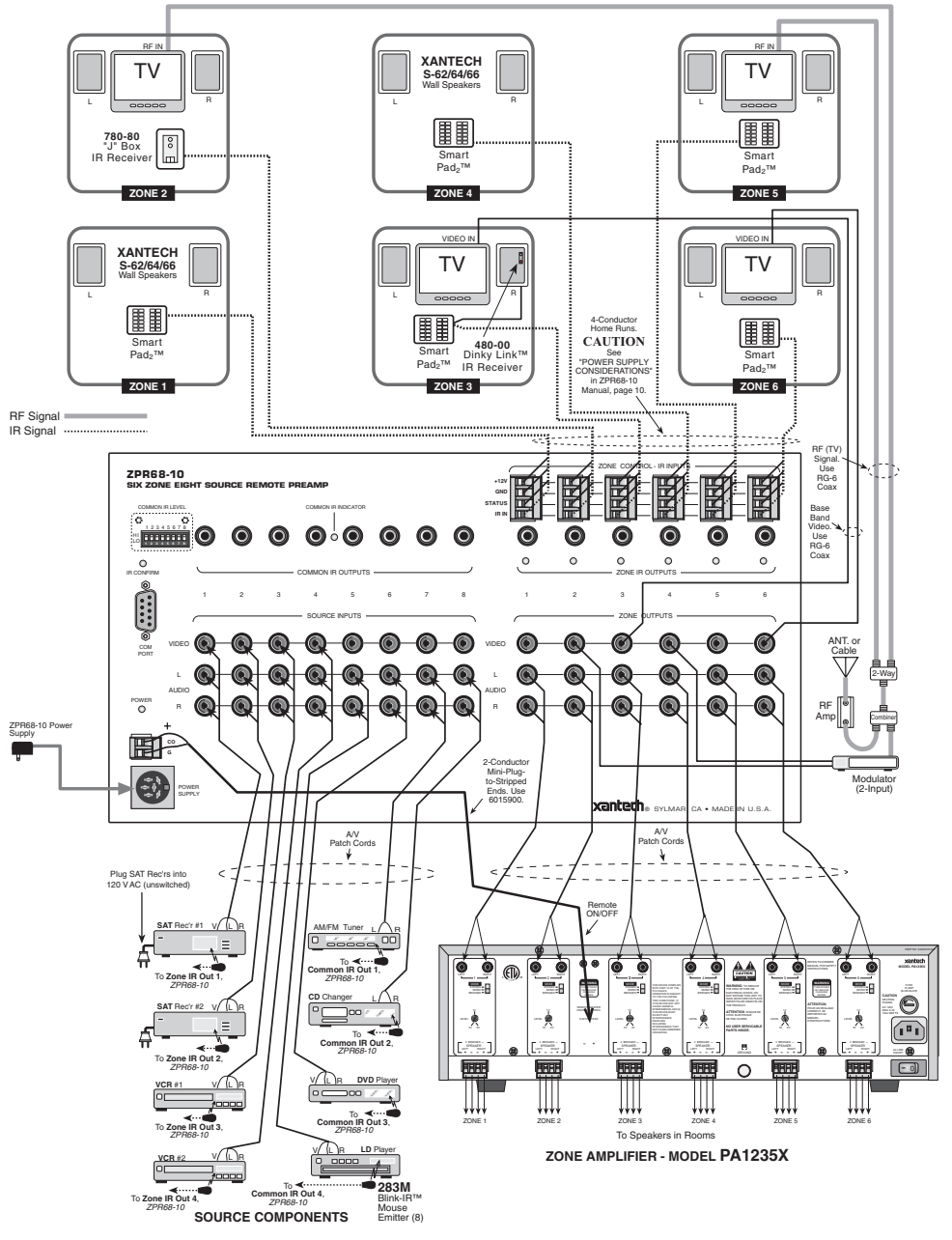

Figure 8 – Typical Multi-Room System with a PA1235X and a ZPR68-10