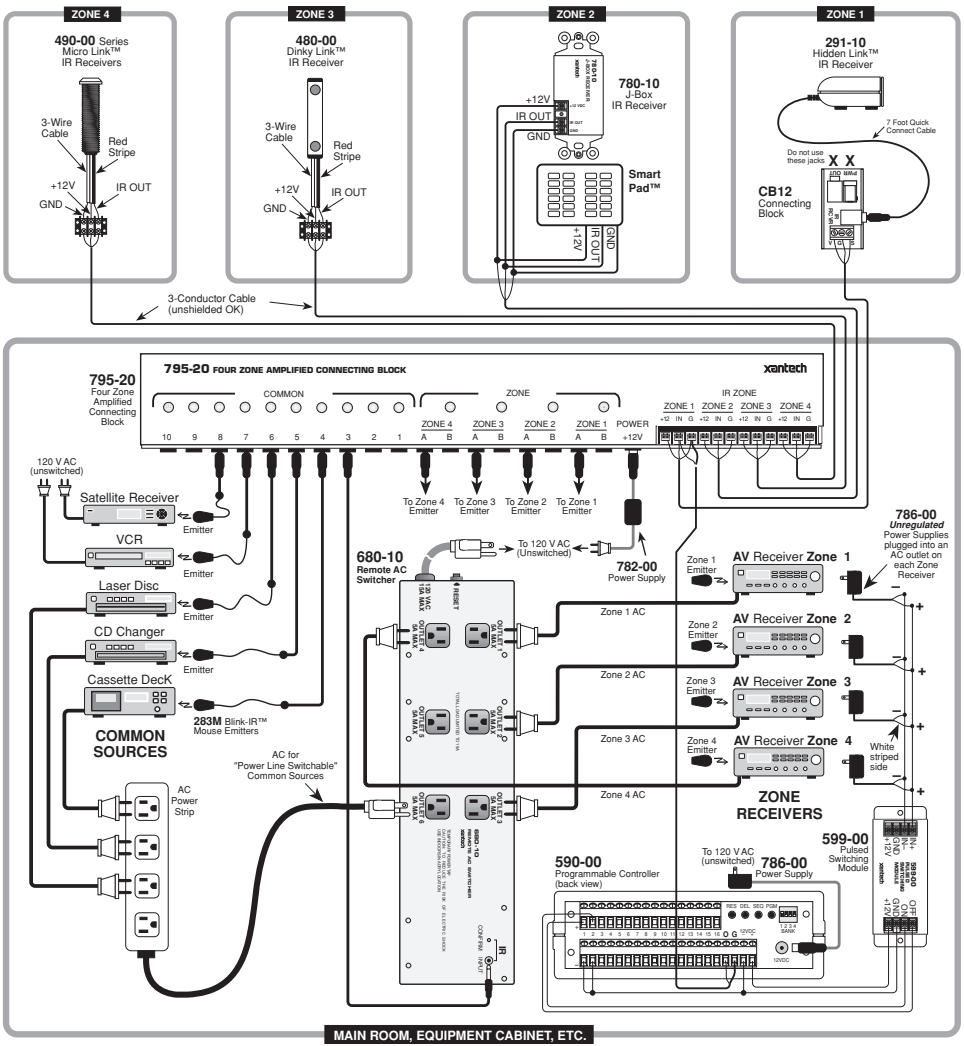

Fig. 3 *A typical application of the 680-10 for AC switching in a 4-zone system.*